Butterfly Valves

Features

- Range of linings for different applications
- Tight shut-off

Specification

Type	Flangeless wafer, rubber lined
Function	Isolating or regulating
Installation	Clamping between two flanges
To suit flanges	PN6, PN10, PN16
Valve shut-off pressures:	
	6 bar
	10 bar
	16 bar
Standard Materials:	
Body	Cast iron GG25
Disc	S/S 431
Shaft	S/S 431
Pin	S/S 431
Lining	EPDM (-40 to +110°C)
Media type	Water, weak acids
Leakage:	
Standard	Tight shut-off @ 16 bar
Undercut	Tight shut-off @ 6 bar
Country of origin	Netherlands

NB All butterfly valves 125mm and above are supplied with undercut discs as standard. This reduces the break-off torque required to operate the valves with out affecting leakage rating up to a maximum pressure of 6 bar.

Product Codes

VB-W50
50mm Butterfly valve
VB-W65
65mm Butterfly valve
VB-W80
80mm Butterfly valve
VB-W100
100mm Butterfly valve
VB-W125
125mm Butterfly valve
VB-W150
150mm Butterfly valve
VB-W200
200mm Butterfly valve

Linkages:

VB-LK1
50 to 80mm, 16Nm actuator linkage
VB-LK2
100 to 125mm, 16 to 62Nm actuator linkage
VB-LK3
50 to 65mm, failsafe actuator linkage
VB-LKU1
VB-W100 / Unic10/15 actuator linkage
VB-LKU2
VB-W125 / Unic10/15 actuator linkage
VB-LKU3
VB-W150 / Unic10/30 actuator linkage
VB-LKU4
VB-W200 / Unic20 actuator linkage
VB-LKN4
VB-W200 / Nucom 10nM actuator linkage

See table on page 5 for actuator selection.

Technical Overview

The VB-W are a series of range of high specification flange-less wafer type butterfly valves capable of tight shut-off. To achieve this high level of sealing, relatively high torque actuators are required to break away from the closed position.
Standard and undercut disc types are available. Standard disc types give tight shut-off up to 16 bar while undercut disc types provide tight shut-off up to 6 bar but require less torque to operate, allowing smaller actuators to be used.

Torque

The operating torque of butterfly valves of less than DN1000 is generally the result of 3 partial torques:

1/ **Seating torque:**
Torque to overcome the rubber seat friction.

2/ **Bearing friction torque:**
Torque to overcome the friction between the shaft and bearing.

3/ **Dynamic torque:**
Torque developed by pressure differences across a partly opened valve as a result of high flow velocity.

Operating torques:

DN	Differential Pressure		
(mm)	6 bar	10 bar	16 bar
50	10 Nm	10 Nm	11 Nm
65	13 Nm	14 Nm	15 Nm
80	18 Nm	19 Nm	21 Nm
100	30 Nm	32 Nm	36 Nm
125	42 Nm	46 Nm	52 Nm
150	67 Nm	75 Nm	86 Nm
200	130 Nm	140 Nm	160 Nm

NB The operating torques show above are valid **ONLY** for the following conditions:

- The fluid is water without solid particles at a temperature of +1° C to +80° C
- The water does not contain contaminants which may increase the friction between the seating surfaces
- There is **at least** one operation cycle per month
- Flow velocity in the pipe is **not** more than 4 m/s

$$\text{Flow velocity} = \frac{(354 * \text{flow rate in m3/h})}{(\text{Valve size in mm})2}$$

Flow Velocity

The maximum flow velocities to avoid cavitations, noise and vibration are as follows:

- Liquids 5 m/s
- Gases 50 m/s

Kv Values

Part Code	Kv Value
VB-W50	95
VB-W65	231
VB-W80	491
VB-W100	690
VB-W125	1450
VB-W150	1945
VB-W200	4095

Storage Of Valves

Store the valve in dry, dark and cool conditions, preferably indoors with the actual valve temperature higher than the dew point. If outdoor storage is unavoidable, support the valves off the ground and protect the valves with a water-tight cover.
Do not remove the valve packaging or end port protection, until necessary for inspection or installation.
Store the valve in the slightly open position to avoid deformation of the rubber lining.

Inspection

1/ Inspect the valve visually for damage or contamination during transport, handling and storage as this could adversely affect valve performance.

2/ Carefully unpack the valve.

3/ Check the tag plates if attached on the valve.

4/ Inspect the valve interior and lining. It shall be clean, free from foreign matter or damage.

5/ Check that all electric components are marked with the correct IP rating and hazardous class when the valve is to be used in a hazardous location (explosive gas or vapour).

6/ If practical, actuate the valve through close/open and open/close cycles to check the correct function.

Inspection (continued)

Warning: Avoid contact with the valve disc.

Immediately prior to installation, check the flanges to which the valve is to be fastened. The flanges shall have a raised face or a flat face. The sealing face shall be flat, without burrs, grooves, weld spatters, sharp edges and free from oil. The inside diameter shall be large enough to accommodate the protrusion of the valve disc when the valve is open. The possibility of interference between disc and pipe shall be checked and avoided. Also check that the inside diameter of the flange or pipe bore is not too large as this will reduce the flange to valve sealing of the gasket face.

Installation Between Flanges

New valves **do not** require additional flange gaskets, the lining will seal against the mating flange face.

Where practical, valves in buried installations should be located in unpaved areas.

As the valve is bidirectional tight shut off, the direction of installation is not relevant.

When installed in a horizontal pipe, valves larger than DN 300 should have the shaft positioned horizontally.

Installation In An Existing Paperwork

1/ Check that the installation length between the pipe flanges is enough to position the valve without damaging the rubber lining.

2/ Position the valve in the centre of the pipeline and with the shaft horizontally if possible.

3/ Check the bolts for proper size and length.

4/ Tighten the bolts in a crisscross fashion until the valve body (metal) touches the flange face.

Installation In A New Pipeline

1/ Weld the flange to the pipe so that the sealing faces are parallel. Caution: Do not weld a connecting flange to the pipe with the valve installed in order to avoid overheating of the rubber lining.

2/ After cooling the flange, position the valve in the centre of the pipeline and with the shaft horizontally if possible.

Installation In A New Pipeline (continued)

NB Valves may be fitted when in fully closed position. Valves fitted with spring to open actuators may be fitted when in the fully open position or in the fully closed position.

3/ Tighten the bolts in a crisscross fashion until the valve body (metal) touches the flange face.

Testing

1/ Open and close the valve (if possible by hand) to en sure no disc interference.

2/ Clean the pipe interior with a rinsing fluid compatible with the rubber lining and process.

3/ Connect the actuator (if applicable) to the power supply in accordance with the user manual of the actuator.

4/ Check the operation and tightness when the system is under (working) pressure.

Dimensions

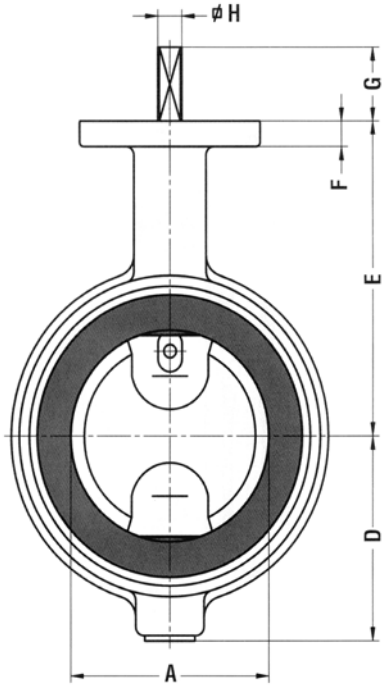

Construction & Material

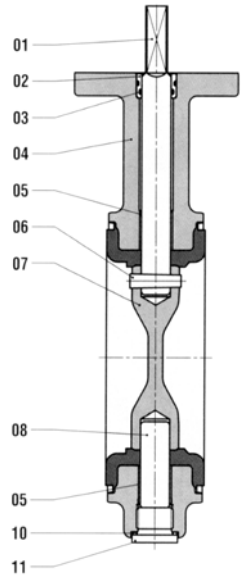

01	Shaft	06	Conical pin
02	Bush	07	Disc
03	O-ring	08	Shaft
04	Rubber-lined body	10	Sealing ring
05	Bearing	11	Plug

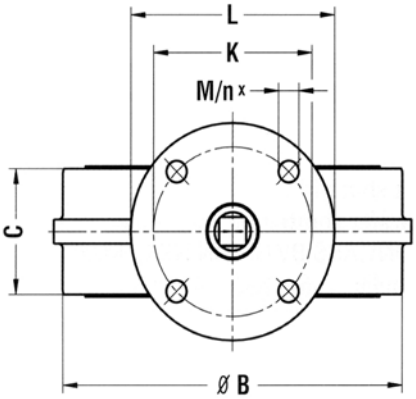

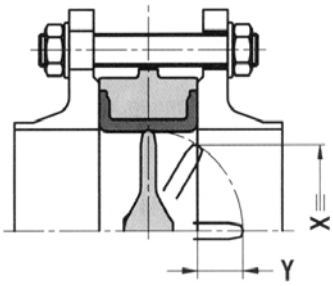

Part Code	Dimensions (mm) A	B	C	D	E	T	G	H	K	L	N	n	X	Y	Weight (kg)
VB-W50	50	100	43	63	118	12	34	10	70	90	9	4	23	2	2.6
VB-W65	65	115	46	71	126	12	34	10	70	90	9	4	25	4	3.2
VB-W80	80	130	46	78	133	12	34	10	70	90	9	4	46	10	3.5
VB-W100	100	150	52	98	147	12	34	12	70	90	9	4	66	17	4.5
VB-W125	125	182	56	109	160	12	34	12	70	90	9	4	86	24	6.3
VB-W150	150	210	56	133	180	14	34	16	70	90	9	4	112	35	8.8
VB-W200	200	262	60	158	204	14	34	16	70	90	9	4	140	47	13.2

Valve & Linkage Tables

Use **Table 1** to select the a non-failsafe actuator & linkage for a butterfly valve of known size and known maximum D.P.

		6 bar DP				10 bar DP				16 bar DP			
Valve	Control Signal	Actuator	Torque (Nm)			Actuator	Torque (Nm)			Actuator	Torque (Nm)		
	(Non-Failsafe)	Part Code	Required	Actuator	Linkage	Part Code	Required	Actuator	Linkage	Part Code	Required	Actuator	Linkage
VB-W50	24VOn/Off	VA-DA1E	10	16	VB-LK1	VA-DA1E	10	16	VB-LK1	VA-DA1E	11	16	VB-LK1
	230VOn/Off	VA-DA2E	10	16	VB-LK1	VA-DA2E	10	16	VB-LK1	VA-DA2E	11	16	VB-LK1
	24VRaise/Lower	VA-DA1E	10	16	VB-LK1	VA-DA1E	10	16	VB-LK1	VA-DA1E	11	16	VB-LK1
	230VRaise/Lower	VA-DA2E	10	16	VB-LK1	VA-DA2E	10	16	VB-LK1	VA-DA2E	11	16	VB-LK1
	24VModulating	VA-DM1.1E	10	16	VB-LK1	VA-DM1.1E	10	16	VB-LK1	VA-DM1.1E	11	16	VB-LK1
	230VModulating	VA-DM2.2E	10	16	VB-LK1	VA-DM2.2E	10	16	VB-LK1	VA-DM2.2E	11	16	VB-LK1
VB-W65	24VOn/Off	VA-DA1E	13	16	VB-LK1	VA-DA1E	14	16	VB-LK1	VA-DA1E	15	16	VB-LK1
	230VOn/Off	VA-DA2E	13	16	VB-LK1	VA-DA2E	14	16	VB-LK1	VA-DA2E	15	16	VB-LK1
	24VRaise/Lower	VA-DA1E	13	16	VB-LK1	VA-DA1E	14	16	VB-LK1	VA-DA1E	15	16	VB-LK1
	230VRaise/Lower	VA-DA2E	13	16	VB-LK1	VA-DA2E	14	16	VB-LK1	VA-DA2E	15	16	VB-LK1
	24VModulating	VA-DM1.1E	13	16	VB-LK1	VA-DM1.1E	14	16	VB-LK1	VA-DM1.1E	15	16	VB-LK1
	230VModulating	VA-DM2.2E	13	16	VB-LK1	VA-DM2.2E	14	16	VB-LK1	VA-DM2.2E	15	16	VB-LK1
VB-W80	24VOn/Off	VA-DAL1E	18	24	VB-LK1	VA-DAL1E	19	24	VB-LK1	VA-DAL1E	21	24	VB-LK1
	230VOn/Off	VA-DAL2E	18	24	VB-LK1	VA-DAL2E	19	24	VB-LK1	VA-DAL2E	21	24	VB-LK1
	24VRaise/Lower	VA-DAL1E	18	24	VB-LK1	VA-DAL1E	19	24	VB-LK1	VA-DAL1E	21	24	VB-LK1
	230VRaise/Lower	VA-DAL2E	18	24	VB-LK1	VA-DAL2E	19	24	VB-LK1	VA-DAL2E	21	24	VB-LK1
	24VModulating	VA-DML1.1E	18	24	VB-LK1	VA-DML1.1E	19	24	VB-LK1	VA-DML1.1E	21	24	VB-LK1
	230VModulating	VA-DML2.2E	18	24	VB-LK1	VA-DML2.2E	19	24	VB-LK1	VA-DML2.2E	21	24	VB-LK1
VB-W100	24VOn/Off	VA-DAG1E	30	32	VB-LK2	VA-DAG1E	32	32	VB-LK2	VB-UNIC10/15/24	36	49	VB-LKU-1
	230VOn/Off	VA-DAG2E	30	32	VB-LK2	VA-DAG2E	32	32	VB-LK2	VB-UNIC10/15/230	36	49	VB-LKU-1
	24VRaise/Lower	VA-DAG1E	30	32	VB-LK2	VA-DAG1E	32	32	VB-LK2	VB-UNIC10/15/24	36	49	VB-LKU-1
	230VRaise/Lower	VA-DAG2E	30	32	VB-LK2	VA-DAG2E	32	32	VB-LK2	VB-UNIC10/15/230	36	49	VB-LKU-1
	24VModulating	VA-DMG1.1E	30	32	VB-LK2	VA-DMG1.1E	32	32	VB-LK2	N/A	36	49	N/A
	230VModulating	VA-DMG2.2E	30	32	VB-LK2	VA-DMG2.2E	32	32	VB-LK2	VB-NUCOM10NS/15	36	49	VB-LKN-1
VB-W125	24VOn/Off	VB-UNIC10/15/24	42	49	VB-LKU-2	VB-UNIC10/15/24	46	49	VB-LKU-2	VB-UNIC10/30/24	52	98	VB-LKU-2
	230VOn/Off	VB-UNIC10/15/230	42	49	VB-LKU-2	VB-UNIC10/15/230	46	49	VB-LKU-2	VB-UNIC10/30/230	52	98	VB-LKU-2
	24VRaise/Lower	VB-UNIC10/15/24	42	49	VB-LKU-2	VB-UNIC10/15/24	46	49	VB-LKU-2	VB-UNIC10/30/24	52	98	VB-LKU-2
	230VRaise/Lower	VB-UNIC10/15/230	42	49	VB-LKU-2	VB-UNIC10/15/230	46	49	VB-LKU-2	VB-UNIC10/30/230	52	98	VB-LKU-2
	230VModulating	VB-NUCOM10NS/15	42	49	VB-LKN-2	VB-NUCOM10NS/15	46	49	VB-LKN-2	VB-NUCOM10NS/30	52	98	VB-LKN-2
VB-W150	24VOn/Off	VB-UNIC10/30/24	67	98	VB-LKU-3	VB-UNIC10/30/24	75	98	VB-LKU-3	VB-UNIC10/30/24	86	98	VB-LKU-3
	230VOn/Off	VB-UNIC10/30/230	67	98	VB-LKU-3	VB-UNIC10/30/230	75	98	VB-LKU-3	VB-UNIC10/30/230	86	98	VB-LKU-3
	24VRaise/Lower	VB-UNIC10/30/24	67	98	VB-LKU-3	VB-UNIC10/30/24	75	98	VB-LKU-3	VB-UNIC10/30/24	86	98	VB-LKU-3
	230VRaise/Lower	VB-UNIC10/30/230	67	98	VB-LKU-3	VB-UNIC10/30/230	75	98	VB-LKU-3	VB-UNIC10/30/230	86	98	VB-LKU-3
	230VModulating	VB-NUCOM10NS/30	67	98	VB-LKN-3	VB-NUCOM10NS/30	75	98	VB-LKN-3	VB-NUCOM10NS/30	86	98	VB-LKN-3
VB-W200	24VOn/Off	VB-UNIC20/24	130	196	VB-LKU-4	VB-UNIC20/24	140	196	VB-LKU-4	VB-UNIC20/24	160	196	VB-LKU-4
	230VOn/Off	VB-UNIC20/230	130	196	VB-LKU-4	VB-UNIC20/230	140	196	VB-LKU-4	VB-UNIC20/230	160	196	VB-LKU-4
	24VRaise/Lower	VB-UNIC20/24	130	196	VB-LKU-4	VB-UNIC20/24	140	196	VB-LKU-4	VB-UNIC20/24	160	196	VB-LKU-4
	230VRaise/Lower	VB-UNIC20/230	130	196	VB-LKU-4	VB-UNIC20/230	140	196	VB-LKU-4	VB-UNIC20/230	160	196	VB-LKU-4
	230VModulating	VB-NUCOM10NM/15	130	196	VB-LKN-4	VB-NUCOM10NM/15	140	196	VB-LKN-4	VB-NUCOM10NM/15	160	196	VB-LKN-4

Use **Table 2** to select the a failsafe actuator & linkage for a butterfly valve of known size and known maximum D.P.

Table 2

		6 bar DP				10 bar DP			
Valve	Control		Torque (Nm)				Torque (Nm)		
	(Failsafe)	Actuator	Required	Actuator	Linkage	Actuator	Required	Actuator	Linkage
VB-W50	24V On/Off	VA-DA1FE	11	16	VB-LK3	VA-DA1FE	11	16	VB-LK3
	230V On/Off	VA-DA2.FE	11	16	VB-LK3	VA-DA1FE	11	16	VB-LK3
VB-W65	24V On/Off	VA-DA1FE	13	16	VB-LK3	VA-DA1FE	14	16	VB-LK3
	230V On/Off	VA-DA2.FE	11	16	VB-LK3	VA-DA1FE	11	16	VB-LK3

NB Failsafe actuators are not available for butterfly valves larger than 65mm or for a D.P. of greater than 10 bar.
See torque information on page 2 of this datasheet.